كلية الهندسة بشبرا

FACULTY OF ENGINEERING AT SHOUBRA

Dimmer Circuit

Name :Nada Ashraf Abd El-Mohsen

Sec : 3

Dr. Maher Abdelrasoul

AC Dimmer circuit

An AC dimmer circuit allows you to control the brightness of an AC light bulb by adjusting the voltage applied to it. This is typically done using a TRIAC, which allows control over the phase of the AC waveform.

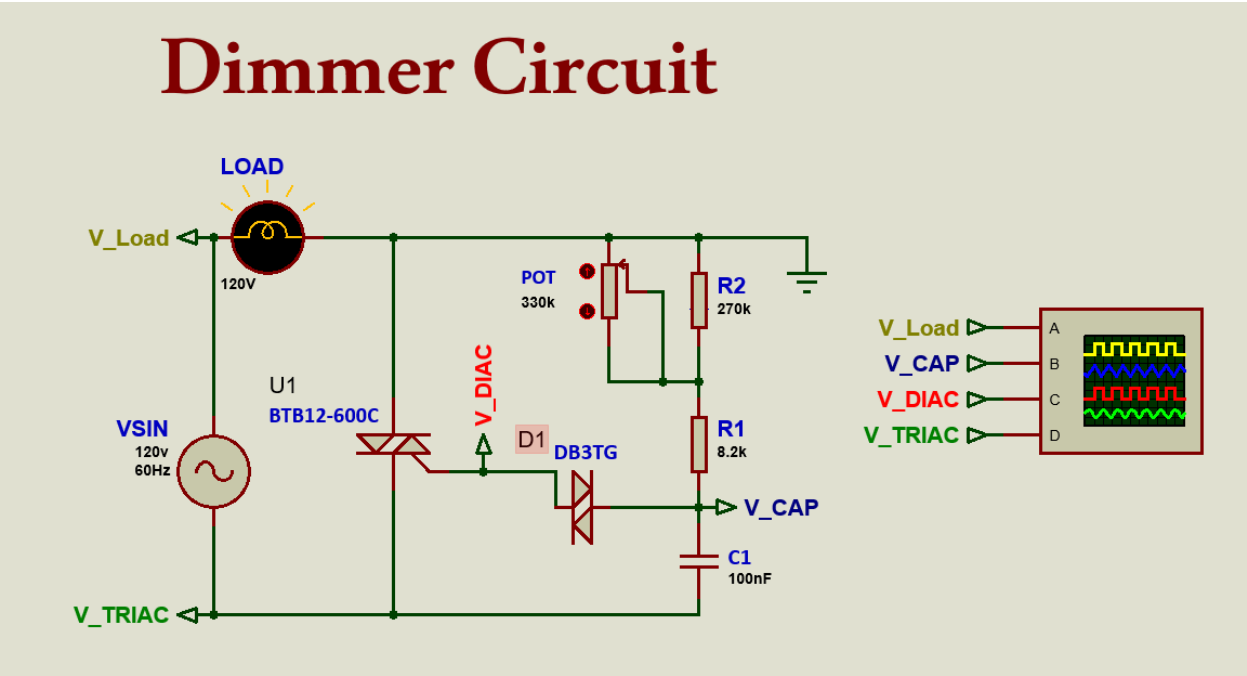

How Values Work Together:

Component	Purpose	Effect of Its Value
POT (330k)	Adjust dimming	Higher = dimmer
R1 (8.2k)	Limit current	Protect DIAC/TRIAC
R2 (270k)	RC timing	Shape waveform delay
C1 (100nF)	Charge storage	Controls delay
DIAC (DB3)	Trigger TRIAC	~30V firing point
TRIAC (BTB12-600C)	AC control	Handles power switching

The components and their importance:

Power Supply (VSIN) : Value: 120V, 60Hz

TRIAC: BTB12-600C :

- **Function:** The TRIAC is the core component in an AC dimmer circuit. It acts as a switch that can control the power delivered to the load (the light). The TRIAC works by controlling when the AC voltage is allowed to pass through to the load.
- **Importance:** It allows for smooth dimming control by turning the AC current on and off **during** each cycle of the AC waveform.

- **BTB12** can handle up to **12A** RMS load current — suitable for most household lighting and small appliances.
- **600V** rating ensures it's safe under normal and transient conditions on a 120V line.

DIAC: DB3TG :

- **Function:** The DIAC is used to trigger the TRIAC. It is a type of semiconductor that allows current to flow only once the voltage reaches a certain threshold. When this happens, it provides a sharp pulse to the gate of the TRIAC, turning it on.
- **Importance:** It ensures the TRIAC is triggered at the correct point in the AC cycle. It also protects the TRIAC by preventing it from being triggered too early in the waveform.
- **Breakover Voltage:** ~30V , DB3 has a typical breakover voltage of around **30V**, which is suitable for allowing the capacitor to charge to a specific point in each AC cycle before triggering the TRIAC.

🎛 POT (Potentiometer): 330kΩ :

- It adjusts the charging rate of the capacitor.
- **Higher resistance = slower charging = TRIAC triggered later = dimmer light.**
- 330kΩ gives a wide adjustment range, allowing for more precise brightness control.

📦 Resistors:

- These, along with the POT, form the RC time constant for charging the capacitor.
- They shape how fast the capacitor voltage rises, influencing when the DIAC fires.
- **R1** limits inrush current into the capacitor and protects the DIAC/TRIAC.
- **R2** helps fine-tune the RC delay curve for smoother dimming.

⚡ Capacitor: C1 = 100nF (0.1µF):

- It stores energy and charges every AC half-cycle through the resistors and POT.
- The voltage across it controls when the DIAC fires.
- **100nF** is a typical value that allows enough delay to create useful dimming range (up to ~180° phase shift).
- Larger capacitance would charge more slowly and allow a greater delay but may overshoot; smaller capacitance might not delay long enough.

💡 Load (AC Bulb): 120V :

- Standard AC bulb to test dimming. The brightness varies with the amount of waveform passed by the TRIAC.

📊 Waveforms:

- **V_CAP (Blue):** Voltage across the capacitor. Shows how it charges until it reaches DIAC breakover.
- **V_DIAC (Red):** Sharp spike when DIAC fires, triggering the TRIAC.
- **V_TRIAC (Green):** Shows when the TRIAC conducts and allows power to flow to the load.
- **V_LOAD (Yellow):** Shows the actual waveform reaching the light. More area under the curve = brighter light.

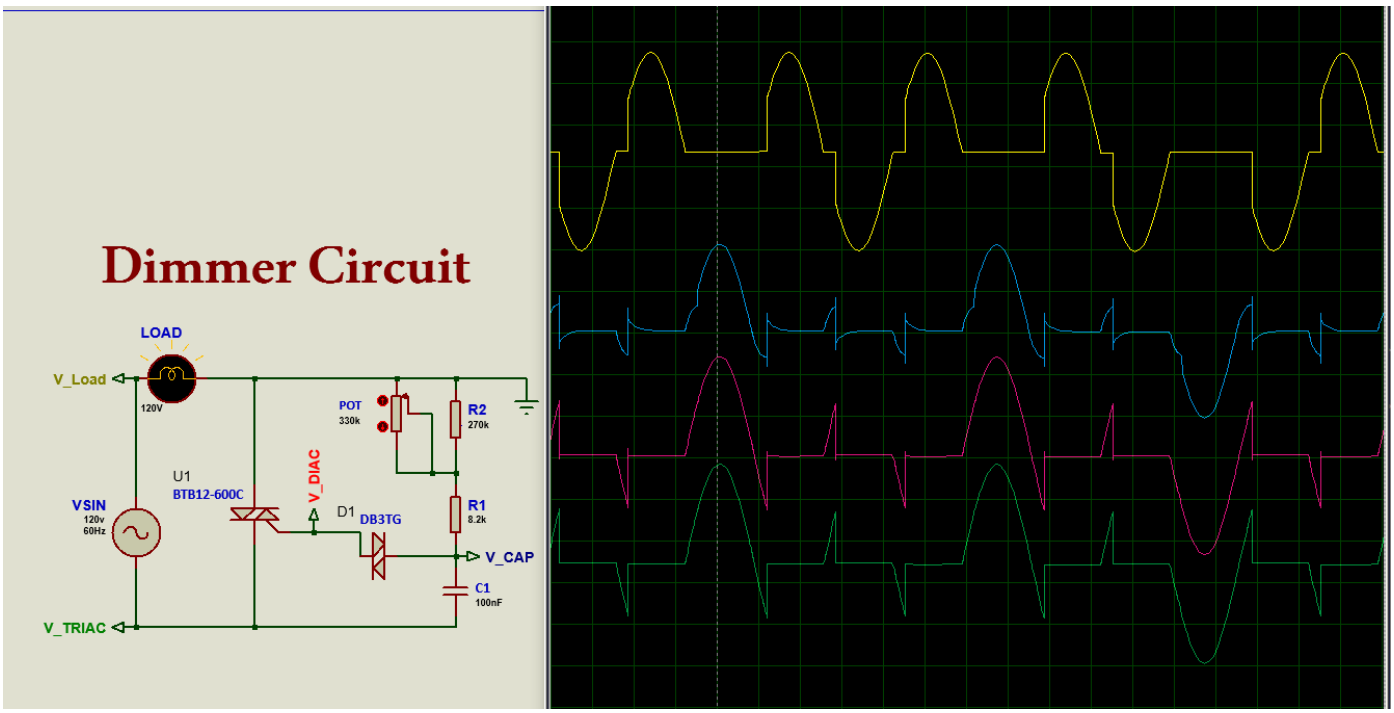

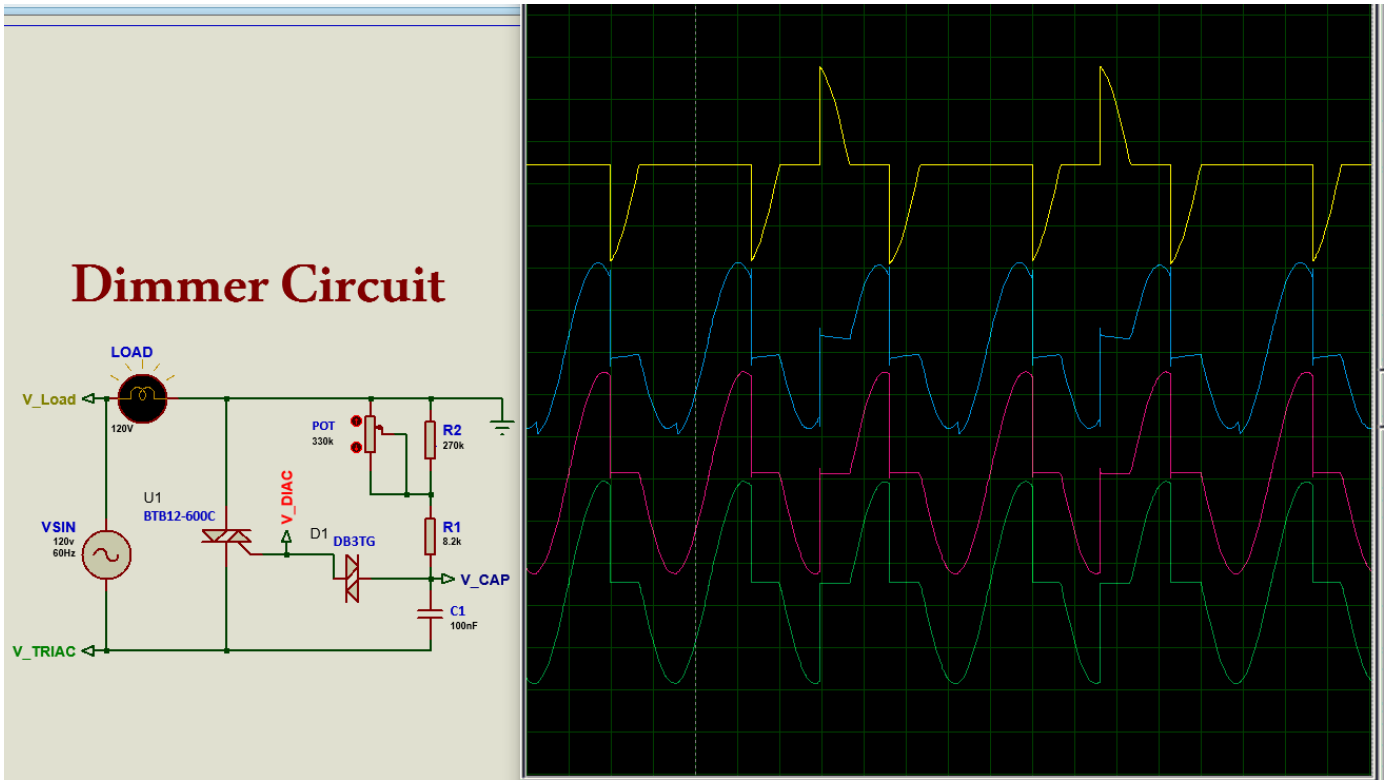
Dimmer Circuit
LOAD
V_Load
120V
POT
330k
R2
270k
U1
BTB12-600C
V_DIAC
VSIN
120v
60Hz
D1
DB3TG
R1
8.2k
V_CAP
C1
100nF
V_TRIAC

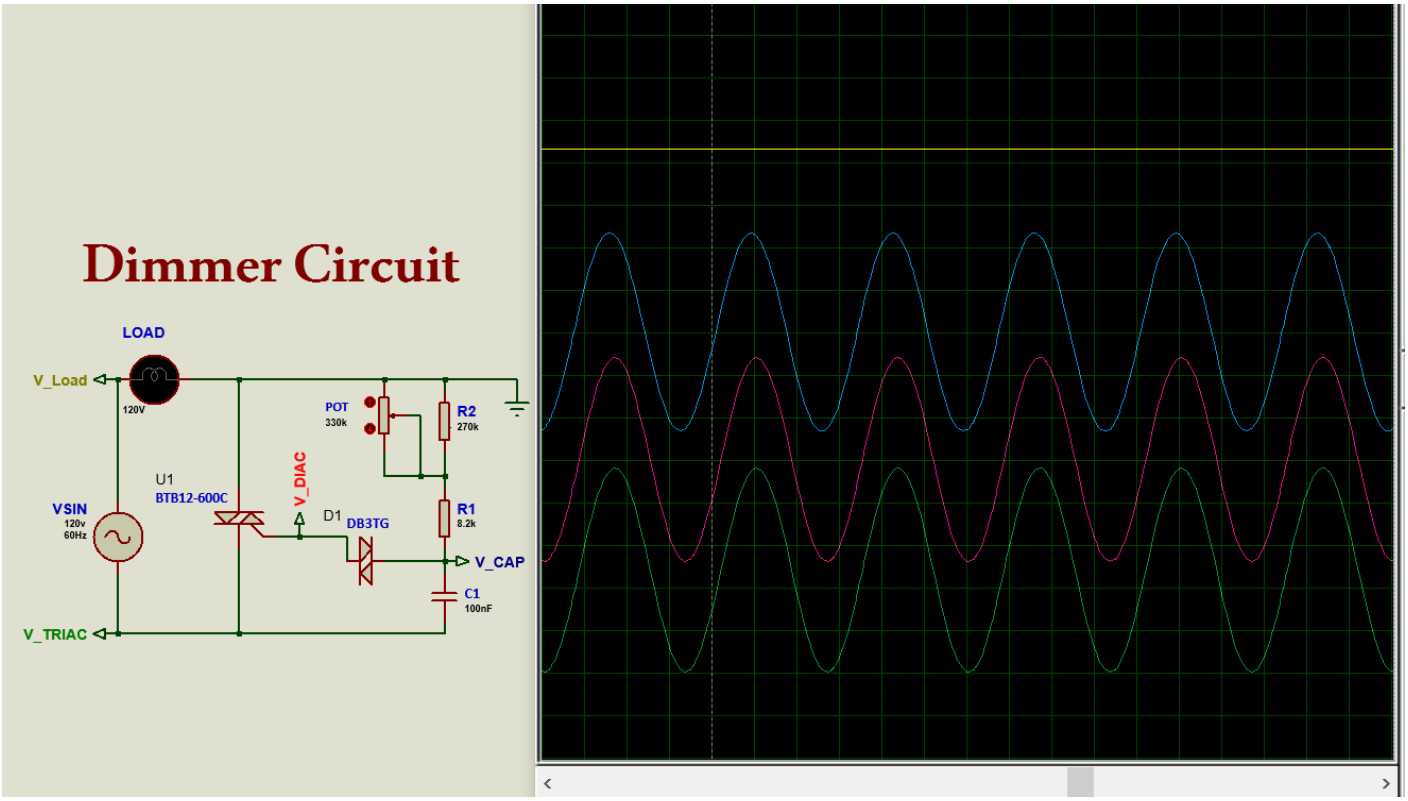
Dimmer Circuit
LOAD
V_Load
120V
POT
330k
R2
270k
U1
BTB12-600C
V_DIAC
VSIN
120v
60Hz
D1
DB3TG
R1
8.2k
V_CAP
C1
100nF
V_TRIAC